FUJITSU Image Scanner

fi-8190/fi-8290/fi-8170/fi-8270/fi-8150 fi-8250/fi-8150U/fi-8250U

Consumable Replacement and Cleaning Guide

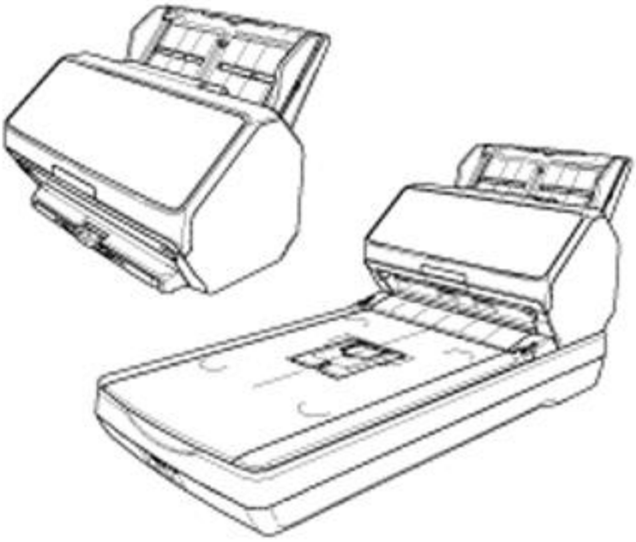

CG00002-305201 Revision A

Daily Care

This section describes how to clean the scanner.

⚠CAUTION

- Do not use aerosol spray or spray that contains alcohol. Paper dust blown up by strong air from the spray may enter inside the scanner, which may cause the scanner to fail or malfunction.
  Also note that sparks generated by static electricity may cause a fire.
- The inside of the ADF becomes very hot when the scanner is being used.
  Before you start cleaning the inside of the ADF, make sure to turn off the power, unplug the power cable and wait for at least 15 minutes for the inside of the ADF to cool down.

Cleaning

Name	Part No.	Notes
Cleaner F1 	PA03950-0352	100 ml Liquid cleaner to use for removing dirt and stains
Cleaning Sheet 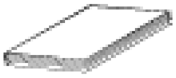	CA99501-0012	10 sheets Used to clean the inside of the scanner with ease. Spray it with Cleaner F1 and scan it with the scanner in the same way as a document.
Cleaning Wipe 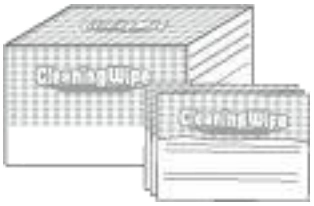	PA03950-0419	24 packets Pre-moistened with Cleaner F1. It can be used instead of moistening a cloth with Cleaner F1.
Cotton swab	Commercially Available	Used to clean a tiny part such as the document sensor.
Dry cloth		Used to wipe off dirt and stains. Moisten it with Cleaner F1 for cleaning.

ATTENTION

In order to use the cleaning materials safely and correctly, read the precautions on each product thoroughly.

Location and Frequency

Location		Frequency
Inside of the scanner (ADF)	Brake roller	Every 5,000 sheets
	Pick roller	
	Feed roller	
	Eject roller	
	Glass	
	Ultrasonic sensor	
	Document sensor	
Inside of the scanner (Flatbed) [fi-8290/fi-8270/fi-8250/fi-8250U]	Document pad	
	Document bed	
	Plastic frame	

The inside of the scanner (ADF) needs to be cleaned regularly for every certain number of sheets scanned. The scanner records the number of sheets scanned so that you can check the number of sheets scanned after you cleaned it last.

- For fi-8190/fi-8290/fi-8170/fi-8270

  Use one of the following methods to check the number of sheets that have been scanned.

  - You can select [5: Consumable counters] from the [Settings Menu] screen on the operator panel to check the number of sheets that have been scanned.

  - You can check the number of sheets that have been scanned in the Software Operation Panel.

- For fi-8150/fi-8250/fi-8150U/fi-8250U

  You can check the number of sheets that have been scanned in the Software Operation Panel.

ATTENTION

Cleaning cycles may vary depending on the condition of the documents. Also, cleaning must be performed more frequently when the following types of documents are scanned:

- Smooth-faced documents such as coated paper
- Documents with printed text/graphics that almost cover the entire surface
- Chemically-treated documents such as carbonless paper
- Documents containing a large amount of calcium carbonate
- Documents written in lead pencil
- Documents on which the toner is not sufficiently fused

Cleaning the Outside of the Scanner

The scanner including the ADF paper chute (feeder) and the stacker should be cleaned with either a piece of dry cloth, a cloth moistened with Cleaner F1/mild detergent, or a sheet of Cleaning Wipe.

ATTENTION

- To avoid deformation and discoloration, never use paint thinner or any other organic solvents.
- Be careful not to let any moisture or water inside the scanner during cleaning.
- It may take a long time to dry if an excessive amount of Cleaner F1/mild detergent is used. Use only a small amount. Wipe off the cleaner completely to leave no residue on the cleaned parts.

For fi-8190/fi-8170/fi-8150/fi-8150U

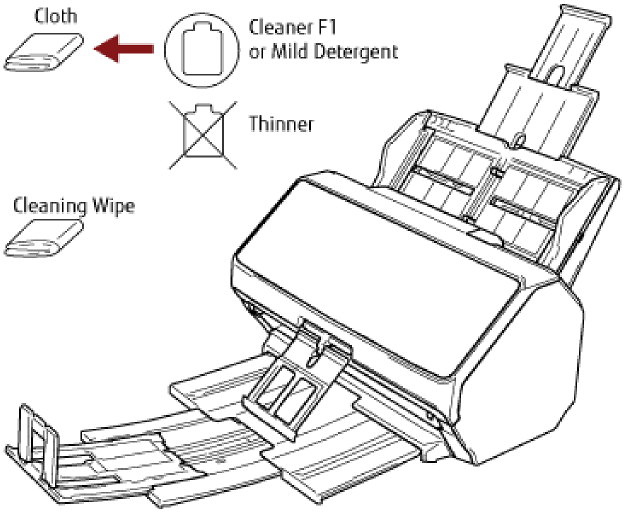
Cloth
Cleaner F1
or Mild Detergent
Thinner
Cleaning Wipe

For fi-8290/fi-8270/fi-8250/fi-8250U

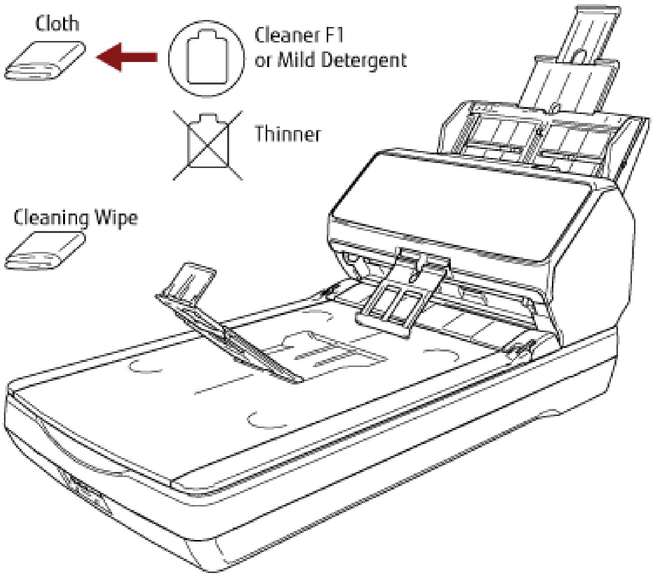
Cloth
Cleaner F1
or Mild Detergent
Thinner
Cleaning Wipe

Cleaning the Inside of the Scanner (ADF) with Cleaning Paper

The inside of the ADF can be cleaned with a sheet of Cleaning Paper moistened with Cleaner F1.

As the scanner continues to feed the documents, paper dust will accumulate inside the ADF and it may cause problems related to scanning or affect the scanned results. Cleaning should be performed approximately every 5,000 sheets scanned. Note that this guideline varies depending on the types of documents you scan. For instance, it may be necessary to clean the scanner more frequently when you scan documents on which the toner is not sufficiently fused.

ATTENTION

- Do not use water or mild detergent to clean the ADF.
- It may take a long time to dry if an excessive amount of Cleaner F1 is used. Use only a small amount.

1. **Turn on the scanner.**
    - For fi-8190/fi-8290/fi-8170/fi-8270

      When the [Ready] screen is displayed on the LCD, proceed to step 2.
    - For fi-8150/fi-8250/fi-8150U/fi-8250U

      When "1" is displayed on the Function Number Display, proceed to step 5.
2. **Press the [Menu] button.**

   The [Settings Menu] screen is displayed on the LCD.
3. **Press the [△]/ [▽] button to select [3: Cleaning], then press the [Scan/Enter] button.**

   The [Cleaning] screen is displayed on the LCD.
4. **Press the [△]/ [▽] button to select [1: Cleaning Paper], then press the [Scan/Enter] button.**

   A message is displayed on the LCD.

   ATTENTION

   Do not start scanning with an image scanning application during cleaning.
5. **Spray the Cleaning Paper with Cleaner F1.**
6. **Pull out the chute extensions according to the length of the Cleaning Paper.**

7. **Adjust the stacker according to the length of the Cleaning Paper.**

8. **Load the Cleaning Paper in the ADF paper chute (feeder).**

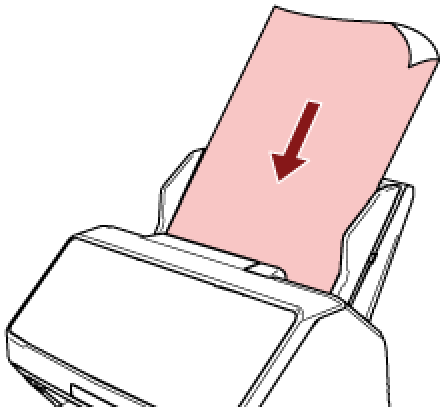

9. **Adjust the side guides to the width of the Cleaning Paper.**

   Move the side guides so that there is no space between the side guides and the Cleaning Paper.

   Otherwise, the Cleaning Paper may be fed skewed.

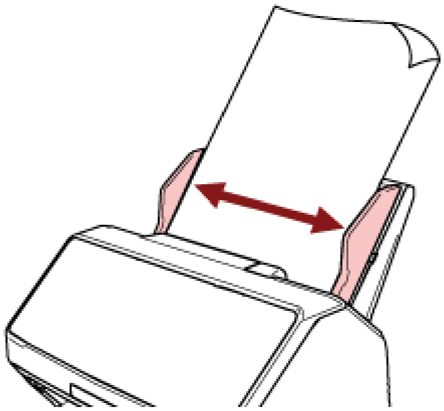

10. **Scan the Cleaning Paper.**
    - For fi-8190/fi-8290/fi-8170/fi-8270

      Press the [Scan/Enter] button, and scan the Cleaning Paper.

      The Cleaning Paper is fed and ejected onto the stacker.
    - For fi-8150/fi-8250/fi-8150U/fi-8250U

      Start an image scanning application and scan the Cleaning Paper.

      The Cleaning Paper is fed and ejected onto the stacker.

11. **Clear the cleaning counter.**
    - For fi-8190/fi-8290/fi-8170/fi-8270

      Use one of the following methods to clear the cleaning counter.

      - Select [5: Consumable counters] from the [Settings Menu] screen on the operator panel, then clear the cleaning counter.
      - Clear the cleaning counter in the Software Operation Panel.
    - For fi-8150/fi-8250/fi-8150U/fi-8250U

      Clear the cleaning counter in the Software Operation Panel.

Cleaning the Inside of the Scanner (ADF) with a Cloth

The inside of the ADF can be cleaned with a piece of cloth moistened with Cleaner F1, or a sheet of Cleaning Wipe.

As the scanner continues to feed the documents, paper dust will accumulate inside the ADF and it may cause problems related to scanning or affect the scanned results. Cleaning should be performed approximately every 5,000 sheets scanned. Note that this guideline varies depending on the types of documents you scan. For instance, it may be necessary to clean the scanner more frequently when you scan documents on which the toner is not sufficiently fused.

⚠ CAUTION

The inside of the ADF becomes very hot when the scanner is being used.

Before you start cleaning the inside of the ADF, make sure to turn off the power, unplug the power cable and wait for at least 15 minutes for the inside of the ADF to cool down.

ATTENTION

- Do not use water or mild detergent to clean the ADF.
- It may take a long time to dry if an excessive amount of Cleaner F1 is used. Use only a small amount. Wipe off the cleaner completely to leave no residue on the cleaned parts.

1. **Turn off the scanner, unplug the power cable and wait for at least 15 minutes.**
2. **Open the ADF.**

   ⚠ CAUTION

   When the ADF is open, it might close accidentally. Be careful not to get your fingers caught.

3. **Clean the following locations with a cloth moistened with Cleaner F1, or a sheet of Cleaning Wipe.**

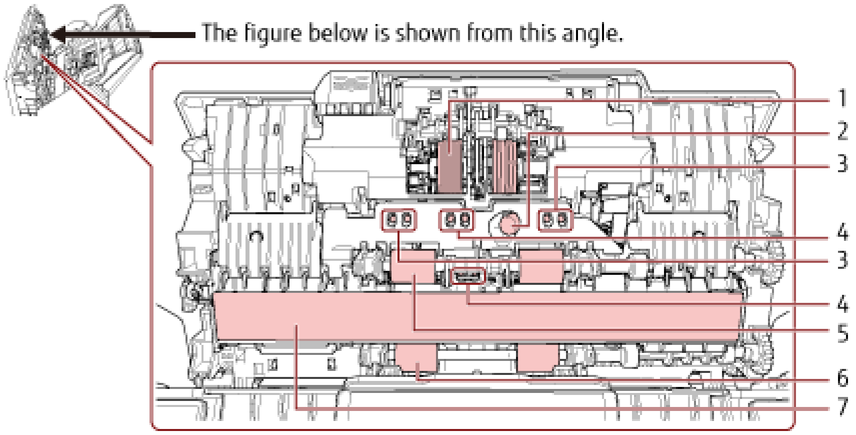
The figure below is shown from this angle.
1
2
3
4
3
4
5
6
7

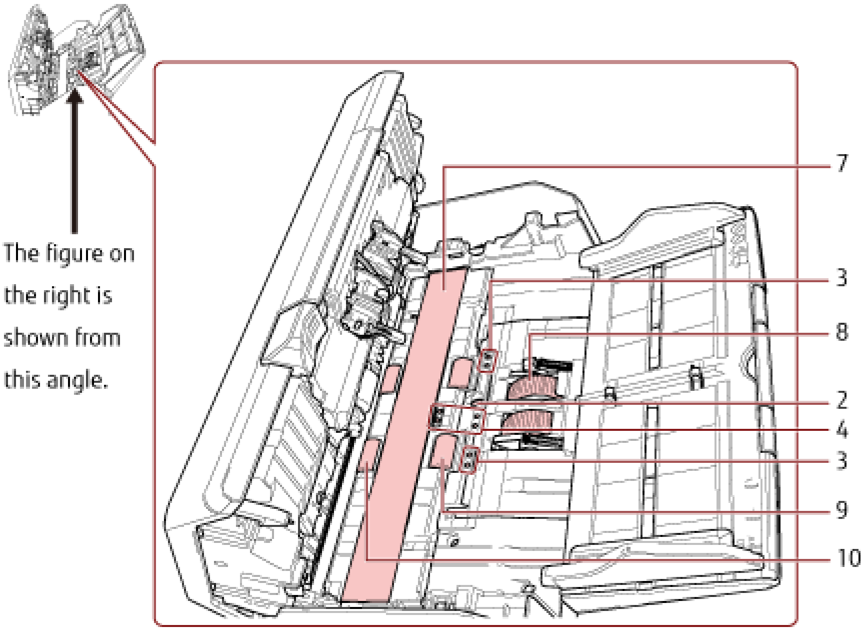
The figure on the right is shown from this angle.
7
3
8
2
4
3
9
10

No.	Location
1	Brake roller (× 2)
2	Ultrasonic sensor (× 2)
3	Document sensor (× 8) [fi-8190/fi-8290/fi-8170/fi-8270]
4	Document sensor (× 8)
5	Feed roller to be cleaned as you rotate the roller manually (× 2)

No.	Location
6	Eject roller to be cleaned as you rotate the roller manually (× 2)
7	Glass (× 2)
8	Pick roller (× 2)
9	Feed roller to be cleaned as you rotate the roller with the power turned on (× 2)
10	Eject roller to be cleaned as you rotate the roller with the power turned on (× 2)

1 Brake roller (× 2)

Remove the brake roller from the scanner.

Gently wipe off any dirt or dust along the grooves, taking care not to damage the roller surface.

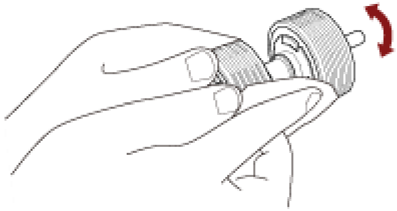

2 Ultrasonic sensor (× 2)

3 Document sensor (× 8) [fi-8190/fi-8290/fi-8170/fi-8270]

4 Document sensor (× 8)

Gently wipe dirt and dust off the surface of the ultrasonic and document sensors.

HINT

If it is difficult to clean, use a cotton swab.

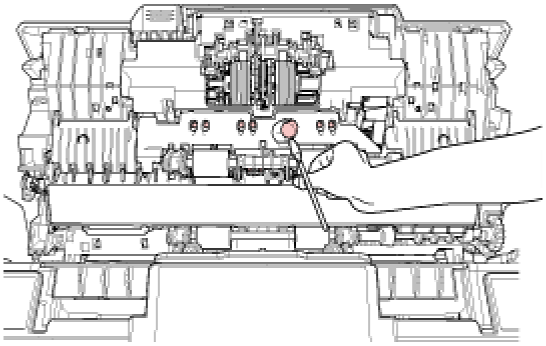

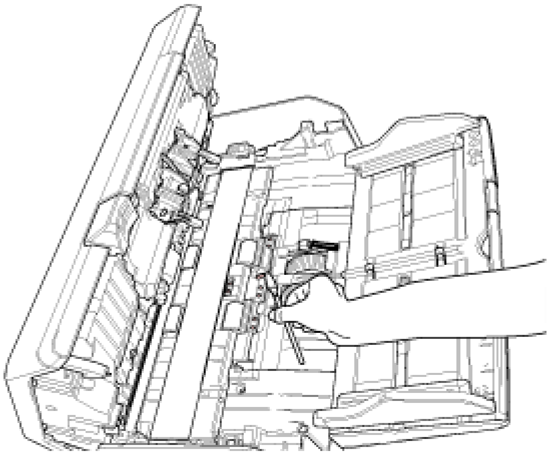

5 Feed roller to be cleaned as you rotate the roller manually (× 2)

6 Eject roller to be cleaned as you rotate the roller manually (× 2)

Gently wipe dirt and dust off the roller, taking care not to damage the roller surface. Make sure that it is wiped properly because black residue on the rollers will affect the feeding performance.

7 Glass (× 2)

Gently wipe dirt and dust off the glass sections.

ATTENTION

Vertical streaks may appear on images if the glass section is dirty.

8 Pick roller (× 2)

Gently wipe off any dirt or dust along the grooves as you rotate the roller manually, taking care not to damage the roller surface. Make sure that it is wiped properly because black residue on the rollers will affect the feeding performance.

9 Feed roller to be cleaned as you rotate the roller with the power turned on (× 2)

10 Eject roller to be cleaned as you rotate the roller with the power turned on (× 2)

The power must be turned on to rotate the feed/eject rollers for cleaning.

a. Plug in the power cable and turn on the scanner.

- For fi-8190/fi-8290/fi-8170/fi-8270

  When the [Ready] screen is displayed on the LCD, proceed to step b.

- For fi-8150/fi-8250/fi-8150U/fi-8250U

  When "1" is displayed on the Function Number Display, proceed to step e.

b. Press the [Menu] button.

The [Settings Menu] screen is displayed on the LCD.

c. Press the [△]/ [▽] button to select [3: Cleaning], then press the [Scan/Enter] button.

The [Cleaning] screen is displayed on the LCD.

d. Press the [△]/ [▽] button to select [2: Roller Wipe], then press the [Scan/Enter] button.

A message is displayed on the LCD.

> **■ ATTENTION**
>
> Do not start scanning with an image scanning application during cleaning.

e. Open the ADF.

> ⚠ CAUTION
>
> When the ADF is open, it might close accidentally. Be careful not to get your fingers caught.

f. If you press the following button on the scanner, the feed rollers/eject rollers rotate a certain amount of times simultaneously.

- For fi-8190/fi-8290/fi-8170/fi-8270

  Pressing the [Scan/Enter] Button

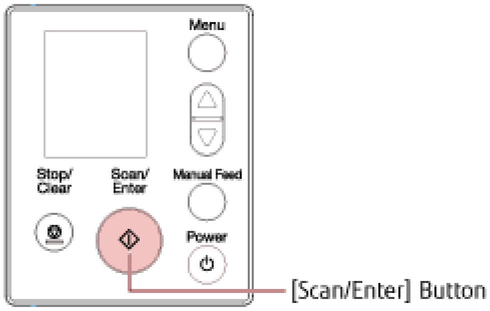
Menu
Stop/
Clear
Scan/
Enter
Manual Feed
Power
[Scan/Enter] Button

- For fi-8150/fi-8250/fi-8150U/fi-8250U

  Press the [Send to] button and the [Scan/Stop] button simultaneously

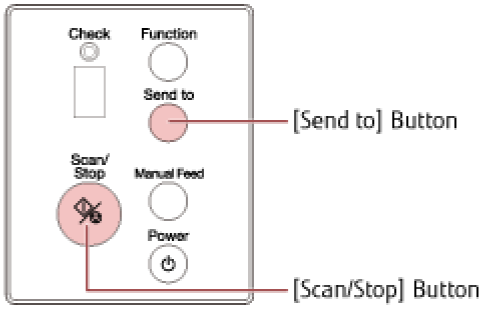
Check
Function
Send to
[Send to] Button
Scan/
Stop
Manual Feed
Power
[Scan/Stop] Button

> **■ HINT**
>
> Pressing the [Send to] button and the [Scan/Stop] button 14 times simultaneously will rotate the feed rollers/eject rollers one revolution.

> ⚠ **CAUTION**
>
> Be careful not to touch the rollers with your hand while they are rotating.

g. Put a piece of cloth moistened with Cleaner F1 or a sheet of Cleaning Wipe against the surface of the rotating feed/eject roller, and wipe horizontally to clean dirt and dust off the whole surface.

Make sure that it is wiped properly because black residue on the rollers will affect the feeding performance.

4. **Close the ADF.**

⚠ CAUTION

Be careful not to get your fingers caught when closing the ADF.

ATTENTION

Confirm that the ADF is closed properly. Otherwise, documents may not be fed into the ADF.

5. **Clear the cleaning counter.**

- For fi-8190/fi-8290/fi-8170/fi-8270

  Use one of the following methods to clear the cleaning counter.

  - Select [5: Consumable counters] from the [Settings Menu] screen on the operator panel, then clear the cleaning counter.
  - Clear the cleaning counter in the Software Operation Panel.

- For fi-8150/fi-8250/fi-8150U/fi-8250U

  Clear the cleaning counter in the Software Operation Panel.

Cleaning the Inside of the Scanner (Flatbed) [fi-8290/fi-8270/fi-8250/fi-8250U]

The flatbed can be cleaned with a piece of cloth moistened with Cleaner F1, or a sheet of Cleaning Wipe.

1. **Open the document cover.**
2. **Clean the following locations with a cloth moistened with Cleaner F1, or a sheet of Cleaning Wipe.**

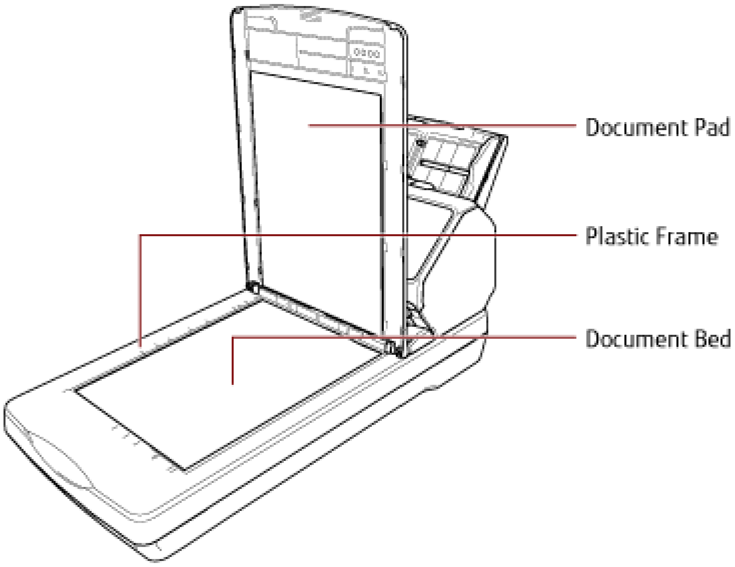

ATTENTION

- 🟧 Be careful not to let the cleaner in between the document bed and the plastic frame.

Cleaning the (Carrier) Sheet

The (Carrier) Sheet should be cleaned with either a piece of dry cloth, a cloth moistened with Cleaner F1/mild detergent, or a sheet of Cleaning Wipe.

Gently wipe dirt and dust off the surface and the inside of the (Carrier) Sheet.

As you keep using the (Carrier) Sheet, dirt and dust will accumulate on the surface and the inside.

Clean it regularly because it may cause problems related to scanning or affect the scanned results.

ATTENTION

- Make sure that the (Carrier) Sheet is not creased.
- To avoid deformation and discoloration, never use paint thinner or any other organic solvents.
- Do not use force to rub against the (Carrier) Sheet because doing so may cause damage or deformation.
- After cleaning the inside of the (Carrier) Sheet with a cloth moistened with Cleaner F1/mild detergent or a sheet of Cleaning Wipe, do not close the (Carrier) Sheet until it is completely dry.
- The Carrier Sheet and Photo Carrier Sheet should be replaced approximately every 500 scans.

  The Booklet Carrier Sheet should be replaced approximately every 2,500 scans.

  Note that these guidelines vary depending on the type of documents scanned and how often the scanner is used and cleaned.

  For information on purchasing the (Carrier) Sheets, contact the distributor/dealer where you purchased this product. Refer to the contact information in the Contact List if supplied with this product, or refer to the contact information in the Contact for Inquiries section if provided in Safety Precautions supplied with this product, and then make an inquiry.

Replacing the Consumables

This section explains how to replace the consumables for the scanner.

⚠ CAUTION

The inside of the ADF becomes very hot when the scanner is being used.

Before you replace the consumables, make sure to turn off the power, unplug the power cable and wait for at least 15 minutes for the inside of the ADF to cool down.

Consumables and Replacement Cycles

Name	Part No.	Suggested Replacement Cycle
BRAKE ROLLER 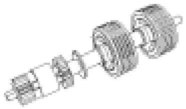	PA03810-0001	200,000 sheets or one year
PICK ROLLER 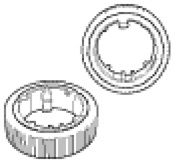	PA03670-0002	200,000 sheets or one year

Consumables need to be replaced periodically. It is recommended that you keep a stock of new consumables and replace them before it reaches the end of the consumable life. The scanner records the number of sheets scanned for each consumable (pick roller and brake roller) and the amount of remaining ink (print cartridge), which allows you to determine when to replace consumables.

- For fi-8190/fi-8290/fi-8170/fi-8270

  Use one of the following methods to check the number of sheets that have been scanned and the amount of remaining ink.

  - You can select [5: Consumable counters] from the [Settings Menu] screen on the operator panel to check the number of sheets that have been scanned and the amount of remaining ink.
  - You can check the number of sheets that have been scanned and the amount of remaining ink in the Software Operation Panel.

- For fi-8150/fi-8250/fi-8150U/fi-8250U

  You can check the number of sheets that have been scanned and the amount of remaining ink in the Software Operation Panel.

Note that the suggested replacement cycles are guidelines for using A4 (80 g/m^2 [20 lb]) wood-free or wood-containing paper, as these cycles vary depending on the type of documents scanned and how often the scanner is used and cleaned.

Replacing the Brake Roller

Replace the brake roller in following procedure.

1. **Turn off the scanner, unplug the power cable and wait for at least 15 minutes.**

2. **Remove all documents from the ADF paper chute (feeder).**

3. **Open the ADF.**

> ⚠ CAUTION
>
> When the ADF is open, it might close accidentally. Be careful not to get your fingers caught.

4. **Remove the brake roller.**
    1. **Hold both ends of the cover, and open it in the direction of the arrow.**

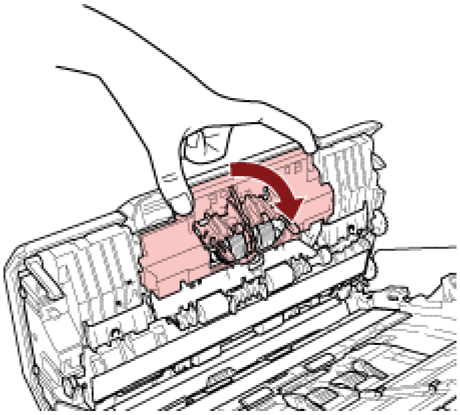

    2. **Slightly pull out the brake roller to release the left side of the shaft, and then pull out the right side of the shaft from the hole.**

5. **Attach the shaft.**

    a. **Insert the right end of the shaft into the hole in accordance with the hole shape, and then attach the left side of the shaft.**

    b. **Close the brake roller cover.**

    > ■ **ATTENTION**
    >
    > Confirm that the brake roller is installed properly. Otherwise, paper jams or other feeding errors may occur.

6. **Close the ADF.**

> ⚠ CAUTION
>
> Be careful not to get your fingers caught when closing the ADF.

7. **Plug in the power cable and turn on the scanner.**

8. **Clear the brake roller counter.**

    - For fi-8190/fi-8290/fi-8170/fi-8270

      Use one of the following methods to clear the brake roller counter.

        - Select [5: Consumable counters] from the [Settings Menu] screen on the operator panel, then clear the brake roller counter.
        - Clear the brake roller counter in the Software Operation Panel.

    - For fi-8150/fi-8250/fi-8150U/fi-8250U

      Clear the brake roller counter in the Software Operation Panel.

Replacing the Pick Roller

Replace the pick roller in following procedure.

1. **Turn off the scanner, unplug the power cable and wait for at least 15 minutes.**
2. **Remove all documents from the ADF paper chute (feeder).**
3. **Remove the ADF paper chute (feeder).**

   Hold both ends of the ADF paper chute (feeder), then lift it in the direction of arrow 1 and pull it out in the direction of arrow 2.

   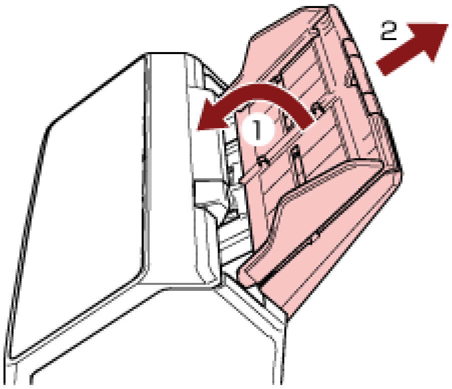

4. **Open the ADF.**

> **⚠ CAUTION**
>
> When the ADF is open, it might close accidentally. Be careful not to get your fingers caught.

5. **Remove the pick roller with its shaft.**

   a. **Open the sheet guide by lifting the tab.**

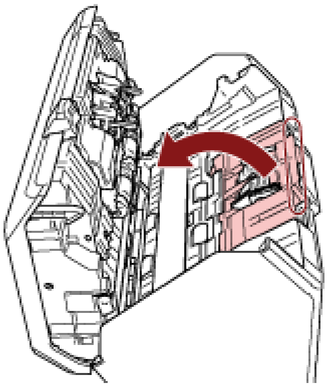

   b. **Rotate the bushing on the shaft from left to right. Hold the bushing to lift up the shaft end, and pull the other shaft end out of the slot.**

ATTENTION

Be careful not to touch the gear near the bushing on the shaft because it has grease over it.

6. **Remove the pick rollers (× 2) one by one from the shaft.**

   a. **Pull out the pick roller from the shaft as you lift the retaining clip.**

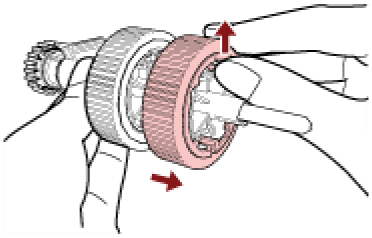

   b. **Pull out the other pick roller from the shaft as you lift the retaining clip.**

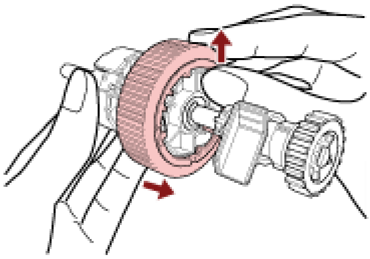

7. **Attach new pick rollers (× 2) on the shaft one by one.**

   a. **Insert the retaining clip of the pick roller into the slot.**

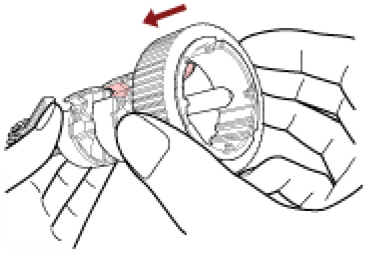

   b. **Insert the retaining clip of the other pick roller into the slot.**

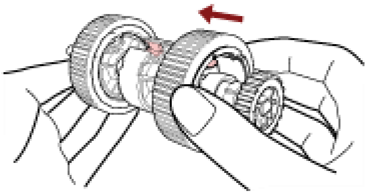

> **ATTENTION**
>
> Confirm that the pick rollers are attached properly. Otherwise, paper jams or other feeding errors may occur.
>
> Make sure you insert the pick rollers until they lock in place.

8. **Attach the shaft.**

   a. **Hold the bushing on the shaft and insert the other shaft end into the slot. Lower the shaft end with the bushing to fit the entire shaft in and rotate the bushing from right to left until the shaft locks in place.**

   b. **Close the sheet guide. Make sure that both ends of the sheet guide are locked firmly.**

> **ATTENTION**
>
> Confirm that the pick rollers are installed properly. Otherwise, paper jams or other feeding errors may occur.

9. **Close the ADF.**

> ⚠ **CAUTION**
>
> Be careful not to get your fingers caught when closing the ADF.

10. **Attach the ADF paper chute (feeder).**

    Insert the tabs into the slots on the back of the scanner in the direction of arrow 1 and tilt the ADF paper chute (feeder) downwards in the direction of arrow 2 until it locks in place.

    Attach the ADF paper chute (feeder) with the side guides facing upwards.

    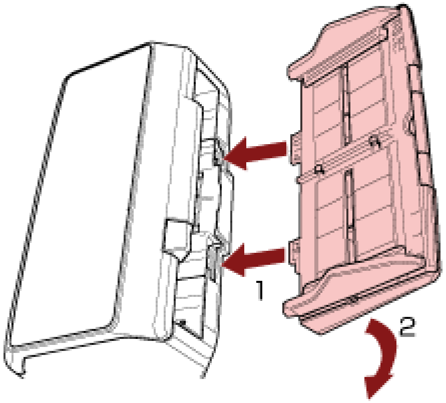

    ■ **ATTENTION**

    Do not leave any space between the ADF paper chute (feeder) and the scanner.

11. **Plug in the power cable and turn on the scanner.**

12. **Clear the pick roller counter.**
    - For fi-8190/fi-8290/fi-8170/fi-8270

      Use one of the following methods to clear the pick roller counter.
        - Select [5: Consumable counters] from the [Settings Menu] screen on the operator panel, then clear the pick roller counter.
        - Clear the pick roller counter in the Software Operation Panel.
    - For fi-8150/fi-8250/fi-8150U/fi-8250U

      Clear the pick roller counter in the Software Operation Panel.

Checking the Sheet Counters

The status of each consumable part can be viewed to determine when to replace or clean the consumables.

The background color of the counter changes as it gets closer to the time to replace the consumables or to clean the scanner.

The color of each counter changes as follows:

- [Brake Roller]/[Pick Roller] counters

  These counters turn light yellow when the sheet count after the consumable replacement reaches 95% of the value specified in [Life Counter Alarm Setting] in the Software Operation Panel, and turn yellow when the sheet count reaches 100%.

- [After cleaning] counter

  This counter turns yellow when the sheet count after cleaning reaches the value specified in [Cleaning Cycle] in the Software Operation Panel.

- [Remaining Ink] counter

  This counter turns yellow when the amount of remaining ink reaches below 33% (only displayed when the imprinter is installed).

1. **Start up the Software Operation Panel.**
2. **From the list on the left, select [Device Setting].**
3. **Check each counter.**

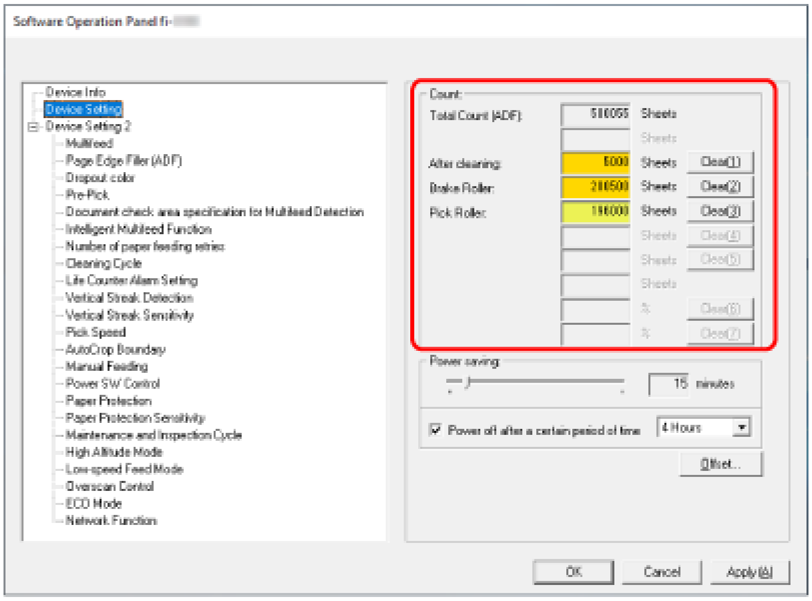
Software Operation Panel fi-
Device Info
Device Setting
Device Setting 2
Multifeed
Page Edge Filler (ADF)
Dropout color
Pre-Pick
Document check area specification for Multifeed Detection
Intelligent Multifeed Function
Number of paper feeding retries
Cleaning Cycle
Life Counter Alarm Setting
Vertical Streak Detection
Vertical Streak Sensitivity
Pick Speed
AutoCrop Boundary
Manual Feeding
Power SW Control
Paper Protection
Paper Protection Sensitivity
Maintenance and Inspection Cycle
High Altitude Mode
Low-speed Feed Mode
Overscan Control
ECO Mode
Network Function
Count
Clear(1)
Clear(2)
Clear(3)
Clear(4)
Clear(5)
Clear(6)
Clear(7)
Power saving
Offset...
OK
Cancel
Apply (A)

Total Count (ADF): 510065 Sheets

After cleaning: 5000 Sheets

Brake Roller: 210500 Sheets

Pick Roller: 190000 Sheets

15 minutes

☑ Power off after a certain period of time: 4 Hours

Total Count (ADF)

Total number of sheets scanned using the ADF (in 1 sheet increments)

Total Count (FB) [fi-8290/fi-8270/fi-8250/fi-8250U]

Total number of sheets scanned using the flatbed [fi-8290/fi-8270/fi-8250/fi-8250U] (in 1 sheet increments)

After cleaning

Total number of sheets scanned after the last cleaning (in 1 sheet increments)

Brake Roller

Approximate number of sheets scanned since the last replacement of brake roller (in units of 500)

Pick Roller

Approximate number of sheets scanned since the last replacement of pick rollers (in units of 500)

Remaining Ink

Amount of ink remaining in the print cartridge of the imprinter (only displayed when the imprinter is installed)

The factory default setting for each counter is "0".

The factory default setting for the [Remaining Ink] counter is displayed only when the imprinter is installed.

ATTENTION

If you turned off the scanner by unplugging the power cable, or selected [Disable power switch], the number of scanned sheets may not be counted in [Total Count].

Clearing the Sheet Counters

When you have replaced or cleaned a consumable part, clear the corresponding counter.

1. **Start up the Software Operation Panel.**
2. **From the list on the left, select [Device Setting] and click the [Clear] button for [After cleaning] when cleaning is performed or click the [Clear] button for the consumable that you replaced.**

   The counter is reset to 0.

   For remaining ink, it is reset to 100.
3. **Click the [OK] button.**

   A message window appears.
4. **Click the [OK] button.**

   The settings are saved.

Messages for Cleaning or Replacing Consumables

The following message may appear on the computer while the scanner is in use.

Example: Message for replacing consumables

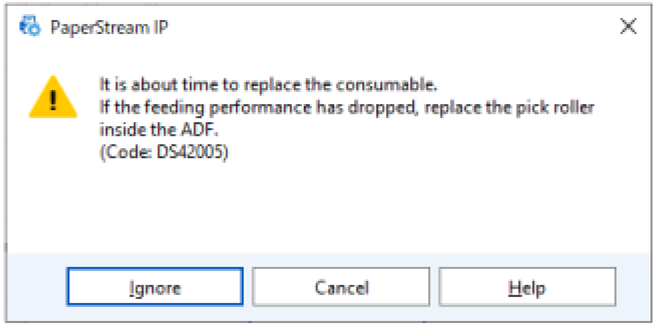

It is about time to replace the consumable.
If the feeding performance has dropped, replace the pick roller inside the ADF.
(Code: DS42005)

Example: Message for cleaning

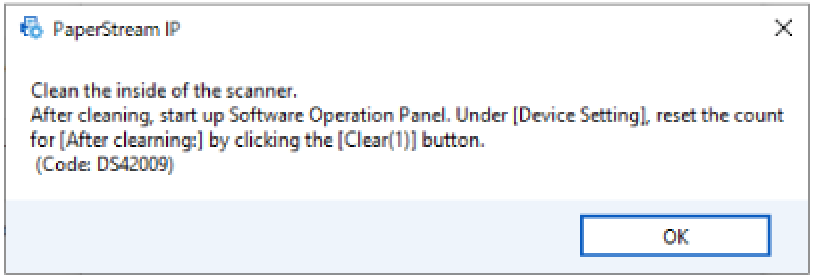

Clean the inside of the scanner.
After cleaning, start up Software Operation Panel. Under [Device Setting], reset the count for [After clearning:] by clicking the [Clear(1)] button.
(Code: DS42009)

Take the following measures according to the displayed message.

- When a message for replacing consumables appears

  Check the message, and replace the consumable accordingly.

  If you click the [Ignore] button, the message disappears and the scan can be continued. However, it is recommended that you replace the consumable as soon as possible.

  To stop the scan and replace the consumable right away, click the [Cancel] button.

- When a message for cleaning appears

  Check the message, and perform cleaning accordingly.

Scanner Cleaning Cycle [Cleaning Cycle]

Specify the cleaning cycle for the scanner inside.

The background color of the [After cleaning] counter in [Device Setting] changes to yellow when the counter reaches the specified value for this item.

1. **Start up the Software Operation Panel.**
2. **From the list on the left, select [Device Setting 2] → [Cleaning Cycle].**
3. **Specify a value for the cleaning cycle.**

   The value can range from 1,000 to 255,000 sheets (in increments of 1,000).

   The factory default setting is "5".
4. **Specify whether or not to display the cleaning instruction message.**

   The [Show cleaning instructions.] check box is cleared for the factory default settings.

Specifying the Cycle to Replace Consumables [Life Counter Alarm Setting]

Specify the replacement cycle for the consumables.

The background color of the counter for [Brake Roller] or [Pick Roller] in [Device Setting] changes to light yellow when the sheet count (after a consumable replacement) reaches 95% of the value specified for this setting and turns yellow when the sheet count reaches 100%.

1. **Start up the Software Operation Panel.**
2. **From the list on the left, select [Device Setting 2] → [Life Counter Alarm Setting].**
3. **Specify a value as the replacement cycle for each of the consumables (brake roller and pick roller).**

   The value can range from 10,000 to 2,550,000 sheets (in increments of 10,000).

   The factory default setting is "20".